UKSOL Ltd, Building 1, Chalfont Park, Gerrards Cross, SL9 0BG

UKSOL | 30 YEAR BRITISH WARRANTY

A BRITISH BRAND OF HIGH QUALITY SOLAR MODULES

UKSOL solar PV modules are always produced with the latest high quality grade A solar cells to deliver the maximum return on your investment. Every UKSOL solar module comes with a British 12 year product warranty and a 30 year performance warranty. Technical and warranty support is provided by our dedicated customer care team based near London.

MODEL
UKSOL UKS-6M30
295-320w 60 cells
MONO MODULE

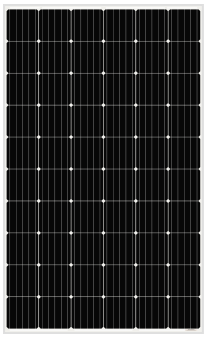

ADVANCED PERFORMACE & PROVEN ADVANTAGES

- High module conversion efficiency up to 19.67%
- Low degradation and excellent performance under high temperature and low light conditions.
- Robust aluminum frame ensures the modules withstand wind loads up to 3600Pa and snow loads up to 5400Pa.
- Positive power tolerance of 0 ~ +3 %.
  High ammonia and salt mist resistance.
- PID resistance. Fire tested.
  Risk free procurement and support from the UK.
- Fully automated production | Special AR gloss coating
  5 bus bars for best performance

QUALITY CERTIFICATES

- TUV Sud tested IEC61215 ed1, IEC61730 ed 2, IEC62716, IEC61701, TUV Sud tested. FIDE Mexico approved. Chile approved. Retie (Colombia). Salt spray and ammonia tested. SONCAP certificate for Nigeria. MCS certified Intertek testing for Kenya, Nigeria and Mali
- ISO9001:2008: Quality management system
  ISO14001:2004: Environmental management system
  OHSAS18001:2007: Occupational health and safety management system. Fire safety class C (according to UL790)
  Safety class II. Maximum system voltage 1500v DC

BRITISH WARRANTIES

- 12 year product warranty.
- Limited power warranty: 12 years 91.2% of the nominal power output, 30 years 80.6% of the nominal power output.

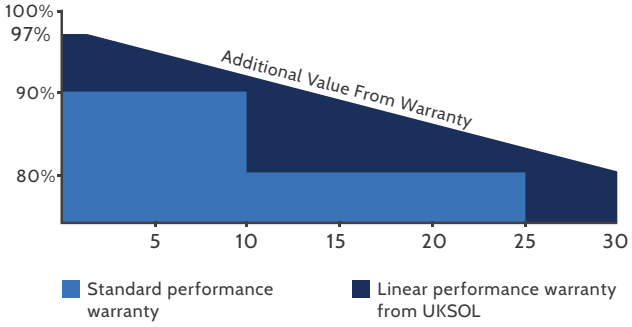

LOW RISK BRITISH PROCUREMENT

BRITISH TECHINCAL SUPPORT

ALWAYS GRADE "A" CELLS

BRITISH QUALITY STANDARDS

MCS CERTIFIED

TÜV SÜD

+44 (0)1753 910327 | info@uksol.uk | www.uksol.uk | WhatsApp: +44 (0)7949 489911

UKSOL and the UKSOL logo are registered trademarks of UKSOL Ltd.

ELECTRICAL CHARACTERISTICS AT STC

Nominal Power (Pmax)	295W	300W	305W	310W	315W	320W
Open Circuit Voltage (Voc)	39.4V	39.6V	39.8V	40.0V	40.2V	40.4V
Short Circuit Current (Isc)	9.62A	9.70A	9.79A	9.88A	9.97A	10.06A
Voltage at Nominal Power (Vmp)	32.2V	32.4V	32.6V	32.8V	33.0V	33.2V
Current at Nominal Power (Imp)	9.17A	9.26A	9.36A	9.46A	9.55A	9.64A
Module Efficiency (%)	18.13	18.44	18.75	19.05	19.36	19.67
Operating Temperature	-40°C to +85°C					
Maximum System Voltage	1000v DC/1500vDC					
Fire Resistance Rating	Type 1 (UL 1703)/Class C (IEC61730)					
Maximum Series Fuse Rating	15A					

STC : Irradiance IOOOW/m², Cell Temperature 25°C, Air Mass 1.5

ELECTRICAL CHARACTERISTICS AT NOCT

Nominal Power (Pmax)	218W	222W	226W	230W	234W	238W
Open Circuit Voltage (Voc)	36.3V	36.5V	36.7V	36.9V	37.1V	37.3V
Short Circuit Current (Isc)	7.79A	7.86A	7.93A	8.00A	8.08A	8.15A
Voltage at Nominal Power (Vmp)	29.4V	29.6V	29.8V	30.0V	30.2V	30.4V
Current at Nominal Power (Imp)	7.42A	7.50A	7.59A	7.67A	7.75A	7.83A

NOCT: Irradiance 8OOW/m², Ambient Temperature 20°C, Wind Speed 1 m/s

MECHANICAL CHARACTERISTICS

Cell Type	Mono PERC 156x156mm (6x6 inches)
Number of Cells	60 (6x10)
Module Dimensions	1640x992x35mm (64.57x39.06x1.38 inches)
Weight	17.5kg (38.6.7 lbs)
Front Cover	3.2mm tempered glass with AR coating
Frame	Anodized aluminium alloy
Junction Box	IP67, 3 diodes
Cable	4mm² (0.006 inches²), 900mm (35.43 inches)
Connector	MC4 or MC4 Compatible

TEMPERATURE CHARACTERISTICS

Nominal Operating Cell Temperature (NOCT)	45°C ± 2°C
Temperature Coefficient Of Pmax	-0.41% / °C
Temperature Coefficient Of Voc	-0.31% / °C
Temperature Coefficient Of Isc	0.05% / °C

PACKAGING

Standard Packaging	30 pcs / Pallet
Module Quantity per 20' Container	360 pcs
Module Quantity per 40' Container	840/896 HQ

ENGINEERING DRAWINGS

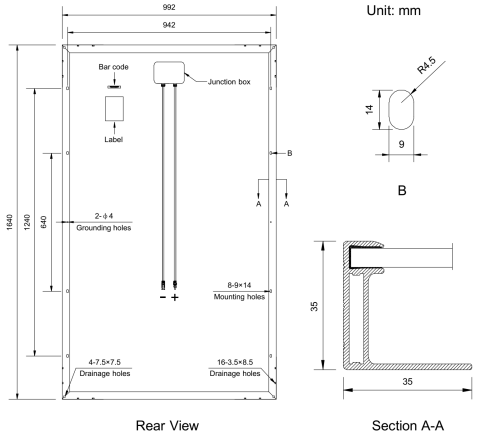

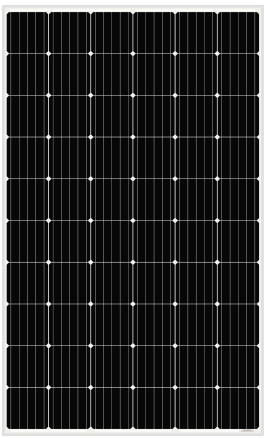

IV CURVES

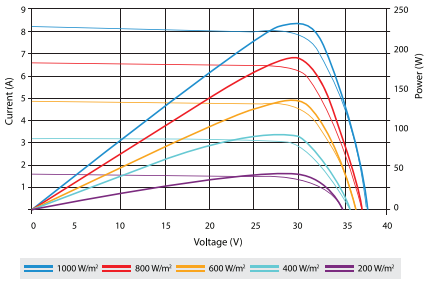

Current-Voltage & Power-Voltage Curves At Different Irradiances

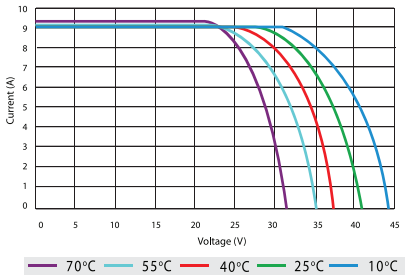

Current-Voltage Curves At Different Temperatures

Specifications in this datasheet are subject to change without prior notice.

Also available in all-black.

+44 (0)1753 910327 | info@uksol.uk | www.uksol.uk | WhatsApp: +44 (0)7949 489911

UKSOL and the UKSOL logo are registered trademarks of UKSOL Ltd.